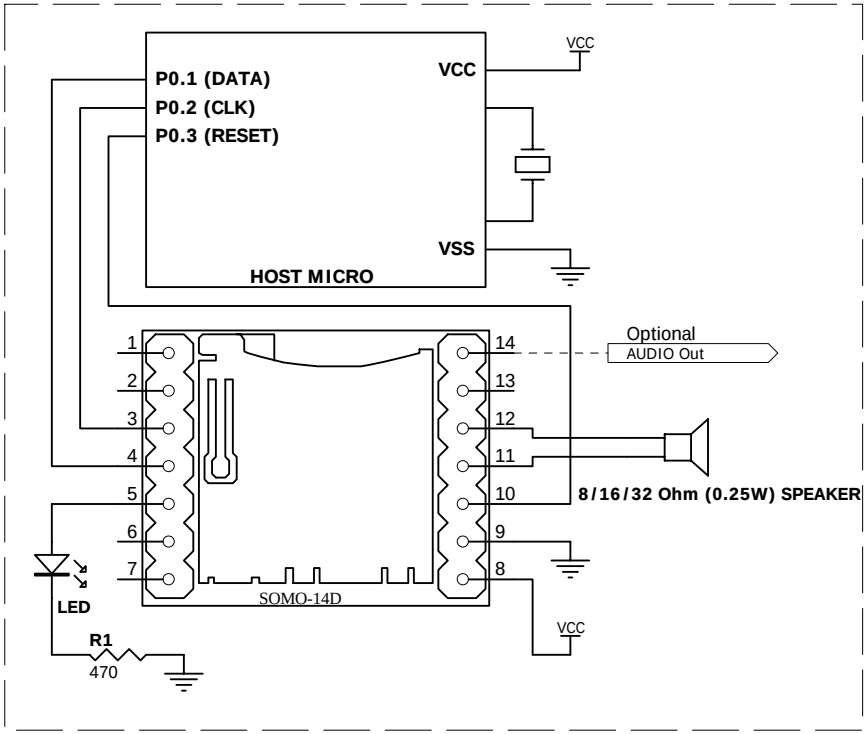

Option 1: 2-WIRE SERIAL MODE

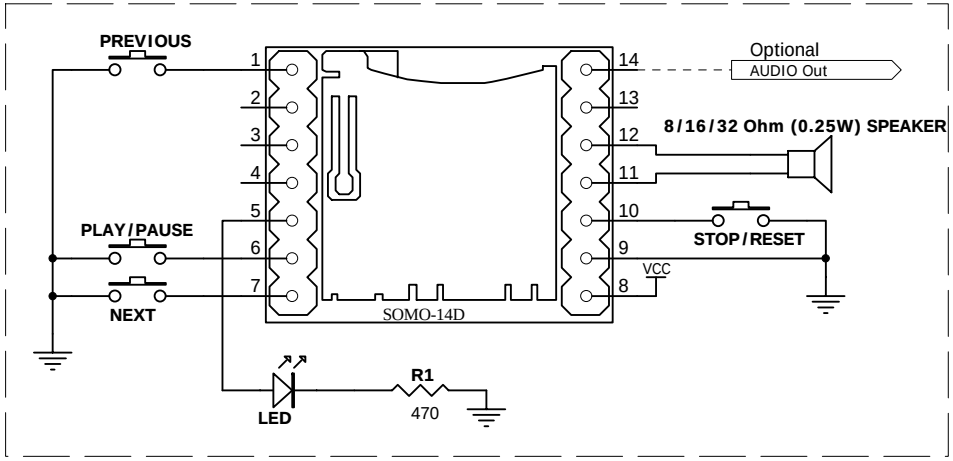

Option 2: KEY MODE (STAND ALONE)

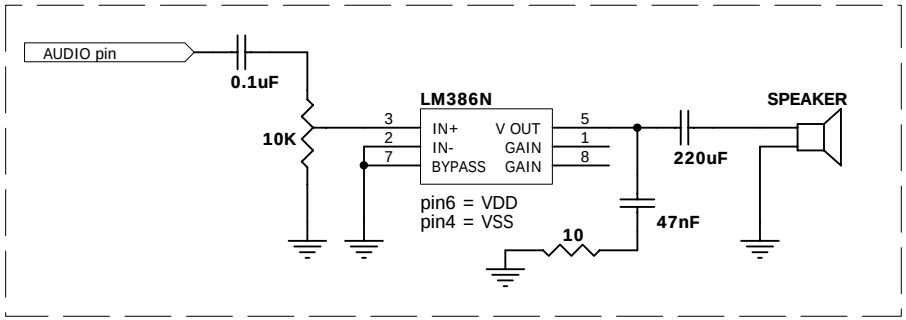

Optional Power Audio Circuit (using 16bit PWM/DAC AUDIO pin 14)

PIN CONFIGURATION

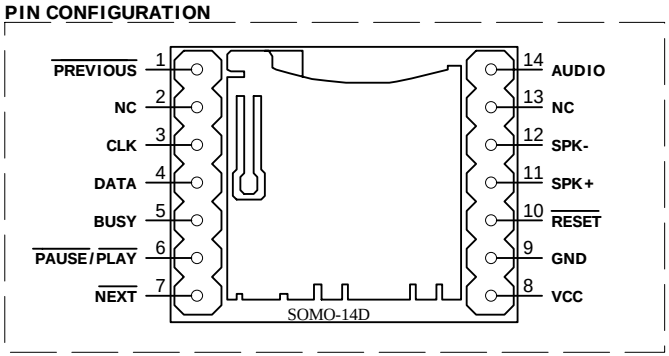

POWER SUPPLY OPTIONS

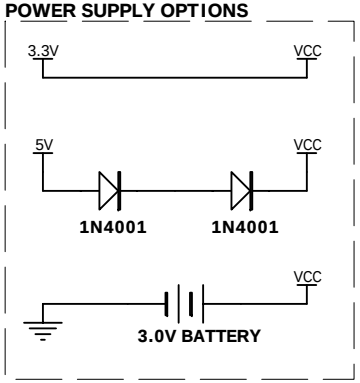

Title: SOMO-14D Applications		
Size: A4	Number	Revision: Rev1
Date: 10-Aug-2009	Sheet of	
File: Y:\Projects\AUDIO-MP3-SOUND\WAYTRONIC\WT9020-SD-mini V1.DDB	Drawn by:	