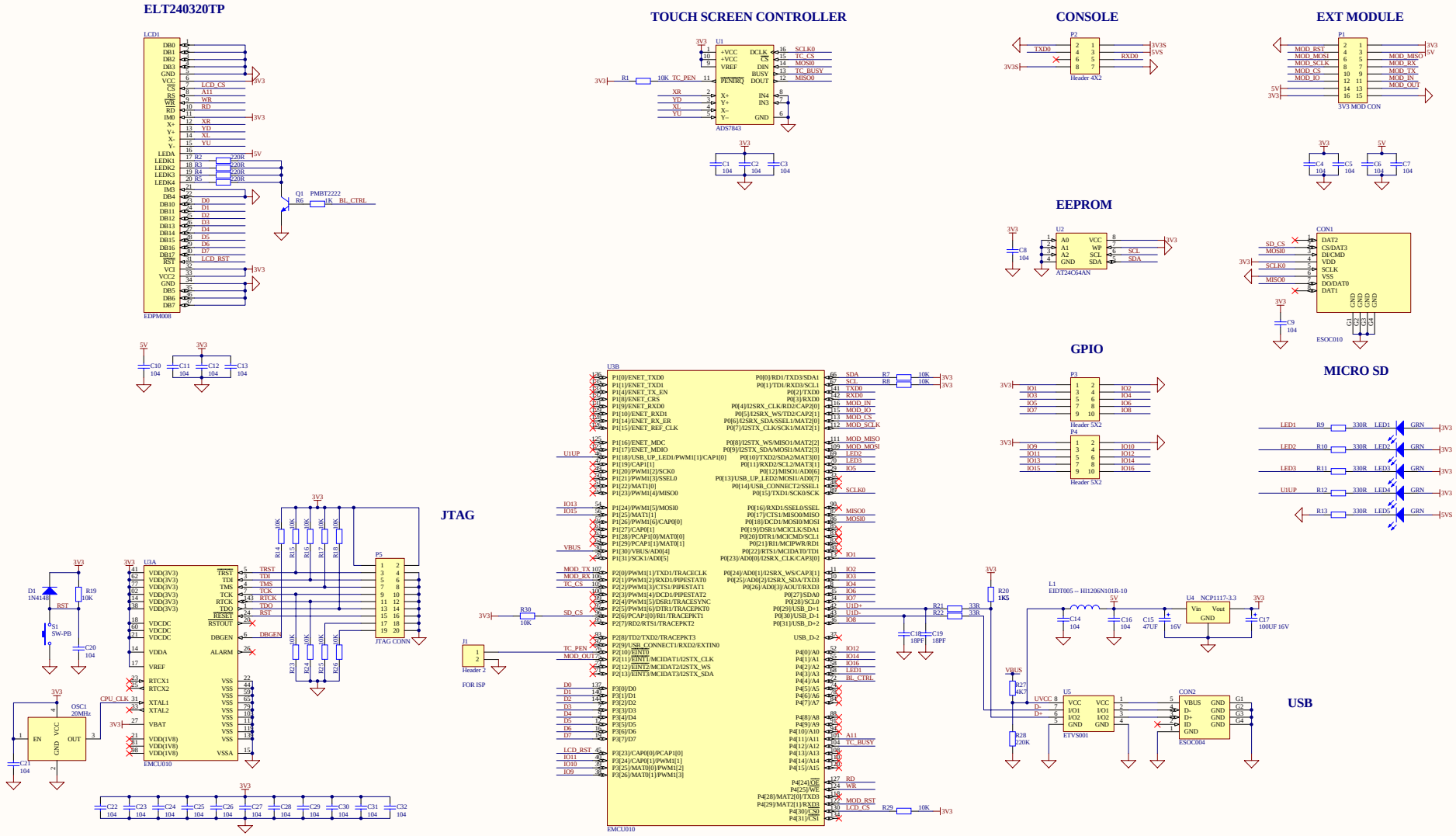
ELT240320TP
TOUCH SCREEN CONTROLLER
CONSOLE
EXT MODULE
EEPROM
GPIO
MICRO SD
JTAG
USB
LCD1
EDPM008
U1
AD57843
P2
Header 4X2
P1
3V3 MOD CON
U2
AT24C64AN
CON1
ESOC010
P3
Header 5X2
P4
Header 5X2
U3B
EMCU010
U3A
EMCU010
P5
JTAG CONN
J1
Header 2
FOR ISP
L1
EIDT005 -- HI1206N101R-10
U4 NCP1117-3.3
U5
ETVS001
CON2
ESOC004
Q1 PMBT2222
D1 1N4148
S1 SW-PB
OSC1 20MHz
Blue Screen Schematic