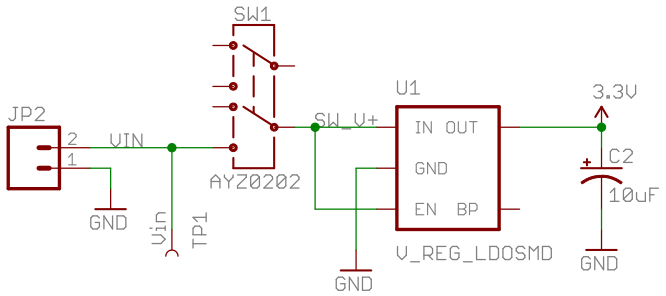

Power

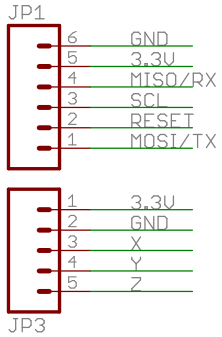

Ports

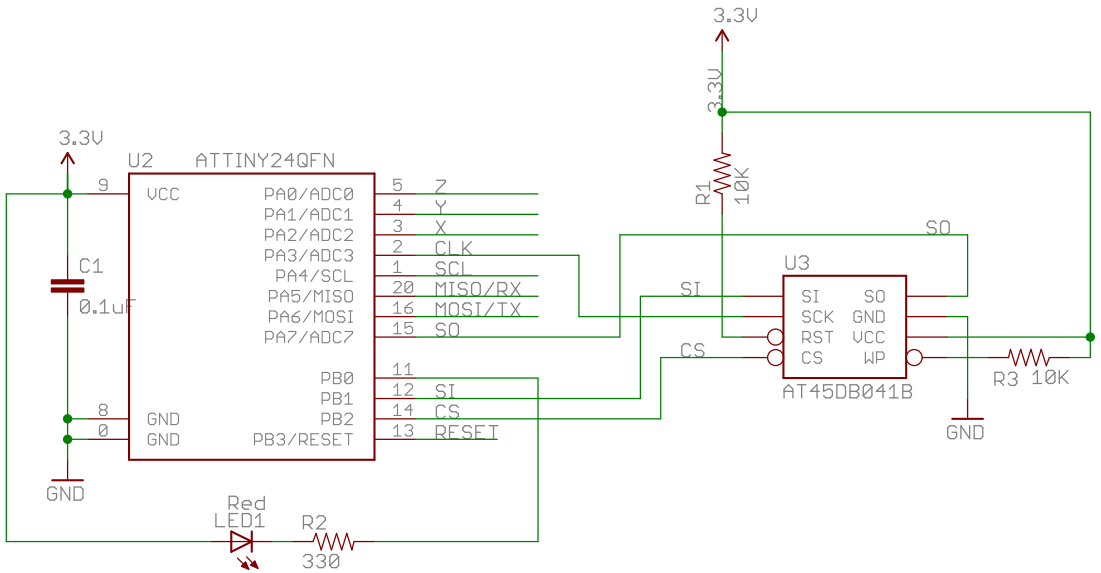

uC & Flash

Spark Fun Electronics

TITLE: uLog-v13

SFE

Document Number:

REV:

Date: 8/19/2009 8:17:01 AM

Sheet: 1/1