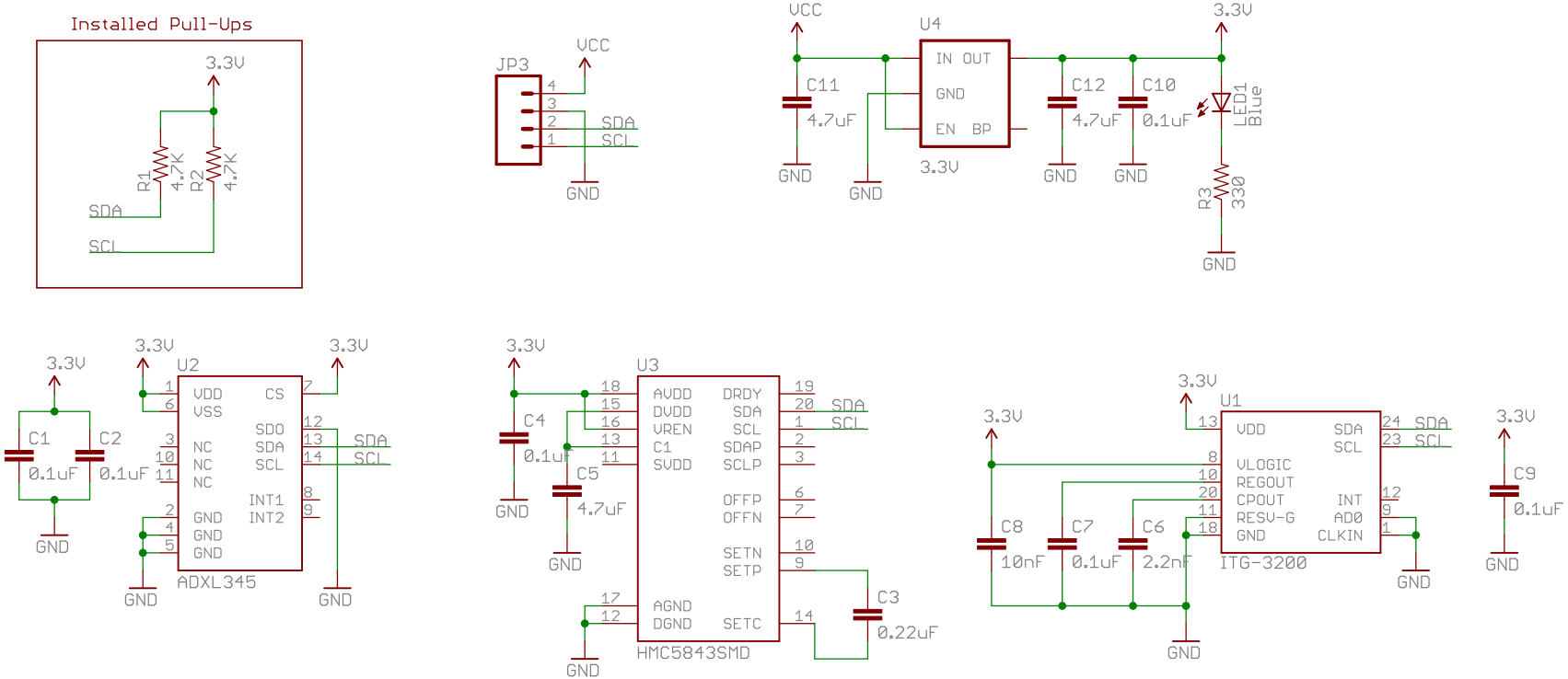

Released under the Creative Commons Attribution Share-Alike 3.0 License
http://creativecommons.org/licenses/by-sa/3.0
Design by: C. Taylor and N. Seidle

SFE

TITLE: 9DoF-Stick-v12

Document Number:

REV:

Date: 11/30/2010 12:06:28 PM

Sheet: 1/1